Wixia CAN

Read/Write CAN frames

120Ω or no termination resistance

DIN-35 rail mounting

Wixia CAN module is dedicated to industrial controllers. This module must be connected to a Wixia-Controller to collect sensor data.
This module allows to read and write CAN frames. If needed, a 120 Ω termination resistance can be activated thanks to a switch.
Module also offers 6 ground connections.

Powered by
APPLEXIA
SIMPLE IS BETTER

For more information
contact us or explore www.applexia.fr

PINOUT

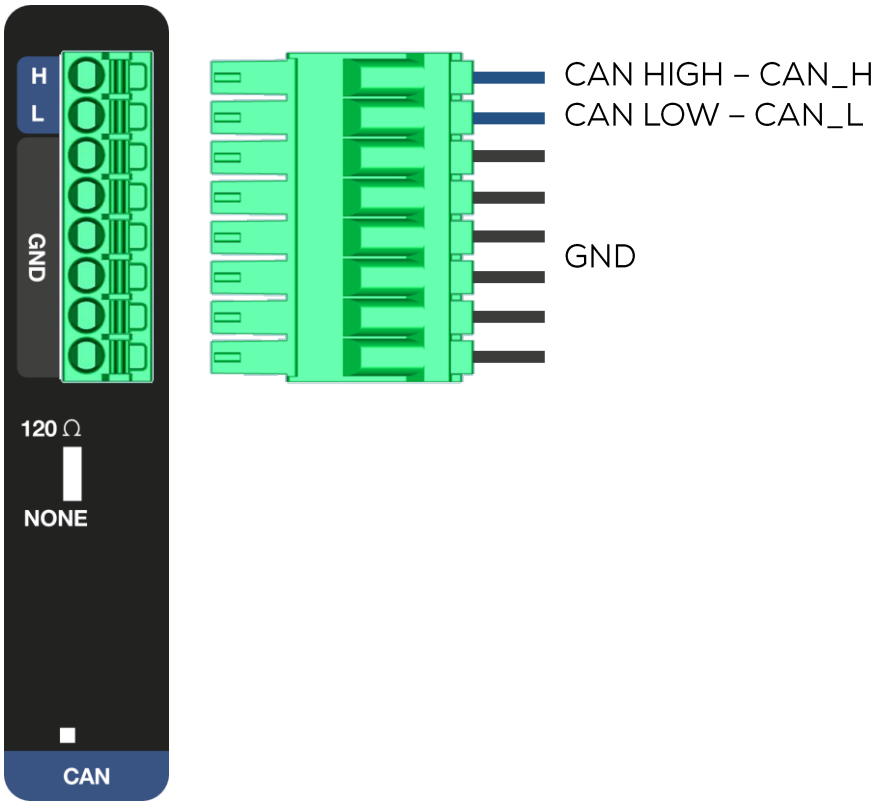

CAN CONNECTION EXAMPLE

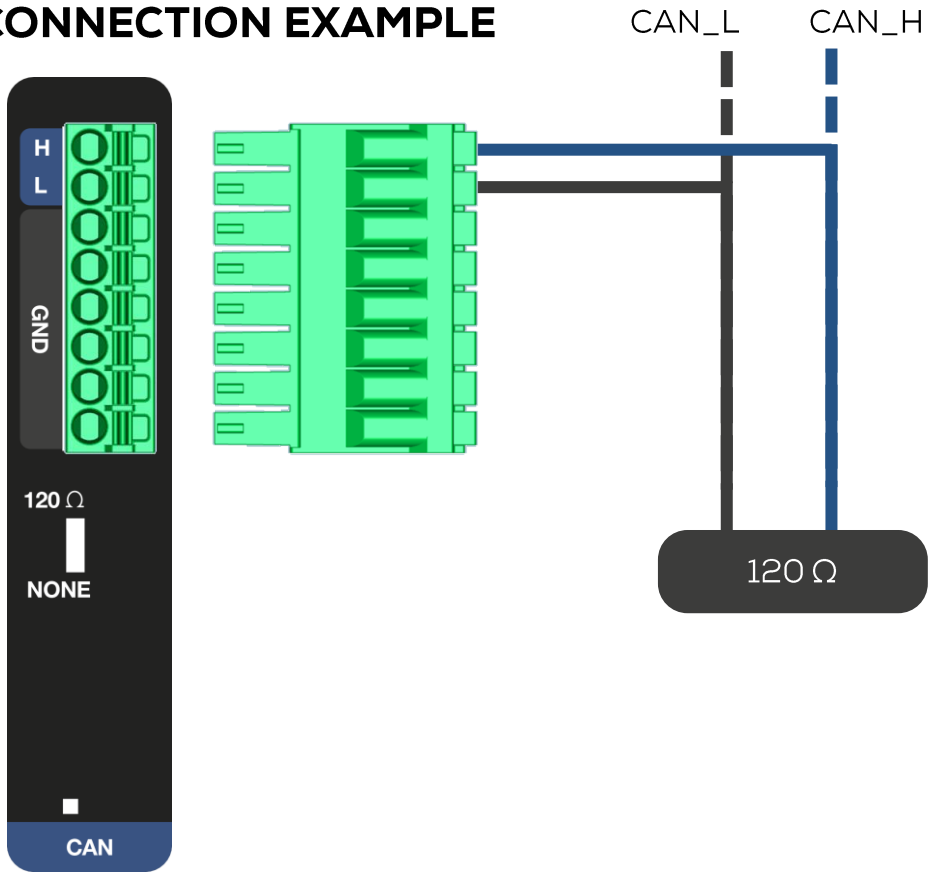

TECHNICAL DATA

GENERAL

Compatibility	To connect to a Wixia-Controller
Power	Provided by Wixia-Controller
Type of connection	Plug-in terminal with push-in connections

CAN PARAMETERS

Baudrate	10 Kbit/s ... 1 Mbit/s		
Sample rate	100ms		
Frame format	Standard 11 bits ID Extended 29 bits ID		
Recorded frames (different ID)	10		
Frames sent (different ID)	6		
Sending rate	Min 1 ms	Typical 1000 ms	Max 2^{32} -1 ms

OPERATING CONDITIONS

Temperature	-25 to 50°C
Humidity	10 to 80%, non-condensing

MECHANICAL CHARACTERISTICS

Dimensions (lxLxp)	2.4 x 5.1 x 9.1cm
Mounting type	DIN-35 rail
Weight	120g

HOW TO CONFIGURE FRAME RECEPTION

Configuration is only accessible using Wixia on computer application. Parameters to be defined are: Time between send (ms), TS1, TS2, SJW and BRP (Baud Rate Prescaler).

PARAMETERS, ADDRESSES, VALUES

Parameter	Address	Min	Typical	Max
Time between send (ms)	61	0	1000	$2^{32} - 1$
TS1	62	1	13	16
TS2	63	1	2	8
SJW	64	1	1	4
BRP	65	1	9	1024
Flag sends (1 to 6)	66	0	_	63
Automatic send at start	67	0	_	1

RECOMMENDED VALUES FOR STANDARD BAUDRATES

Baud rate	TS1	TS2	SJW	BRP
1M	15	2	1	2
800k	7	1	1	5
500k	15	2	1	4
250k	13	2	1	9
125k	13	2	1	18
62.5k	13	2	1	36
20k	15	2	1	100
10k	13	2	1	225

HOW TO CONFIGURE SENDING FRAMES

Configuration is only accessible using Wixia on computer application.

1- Save in memory the ID of the frame, the length of the frame, the number of consecutive sends of the frame and the data of the frame

2- Give the order to send the frame using the send flag (address 66)

PARAMETERS, ADDRESSES, VALUES

Parameter	Address
Frame 1 : ID	70
Frame 1 : Length	71
Frame 1 : Number of sends	72
Frame 1 : 4 first bytes	73
Frame 1 : 4 last bytes	74

SENDING FRAMES (ADDRESS 66)

Frame 6	Frame 5	Frame 4	Frame 3	Frame 2	Frame 1	Value
0	0	0	0	0	0	0
0	0	0	0	0	1	1
0	0	0	0	1	0	2
						3
						4
						5

HOW TO SET SENDING PERIOD

1- Click on the automatic send button.

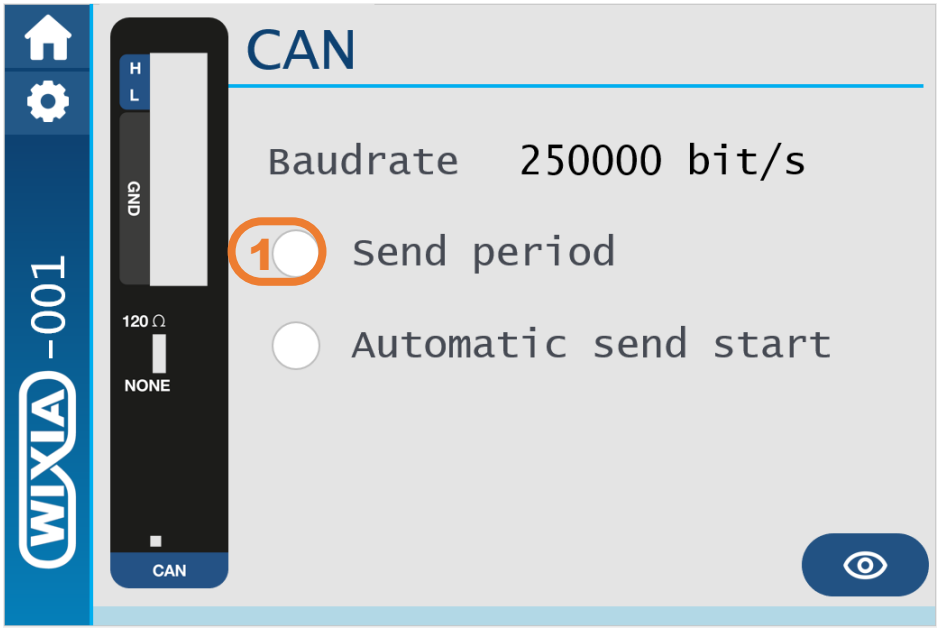

2- Enter the desired value with the keyboard.

3- Click on the validation button

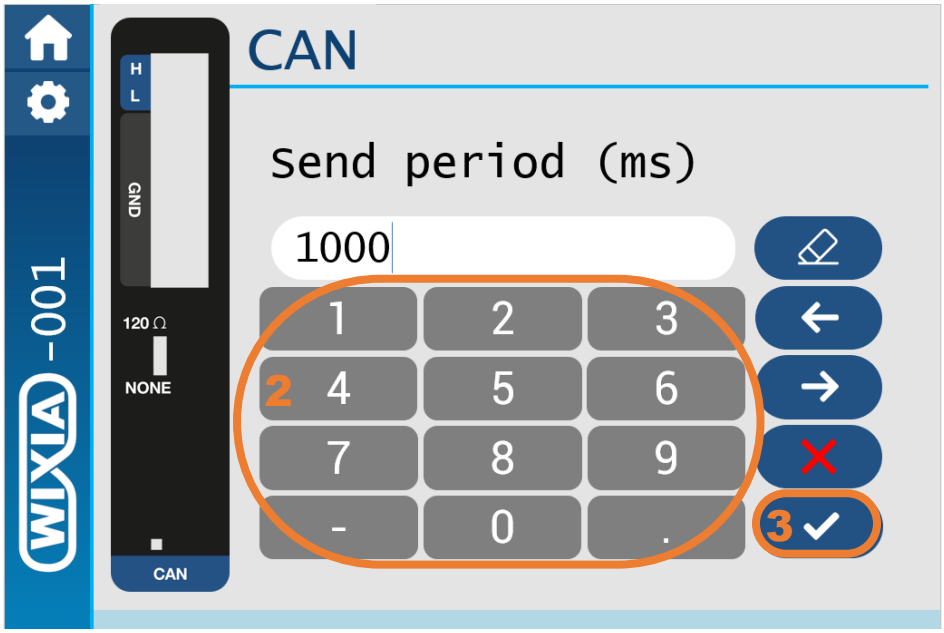

To change the previously configured sending period, simply click on the white input box that indicates the time.
To deactivate automatic sending, click again on the button (1)

HOW TO SET AUTOMATIC SEND AT START

If some sending frames are saved in memory, it can be sent automatically when the system is powered up

1- Click on the automatic send start button.

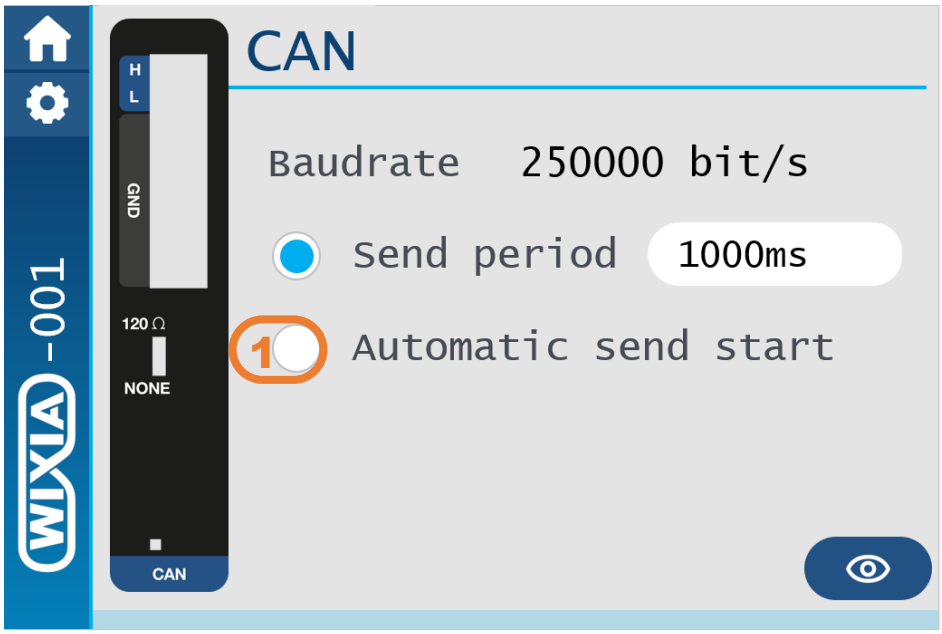

HOW TO MOUNT

1- Simply clip the module onto the DIN-35 rail.

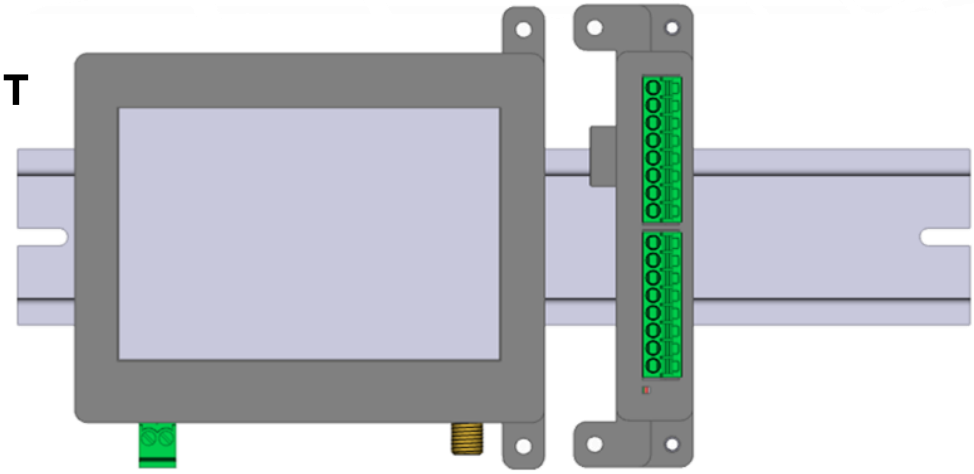

2- Slide the module to the left to connect it to the Wixia-Controller or to another module.

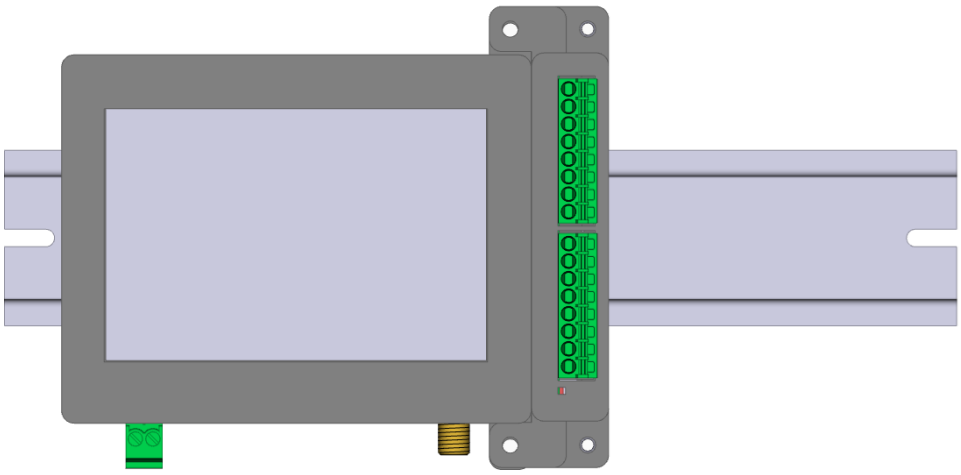

3- Fix the modules together using two M3x16 screws.

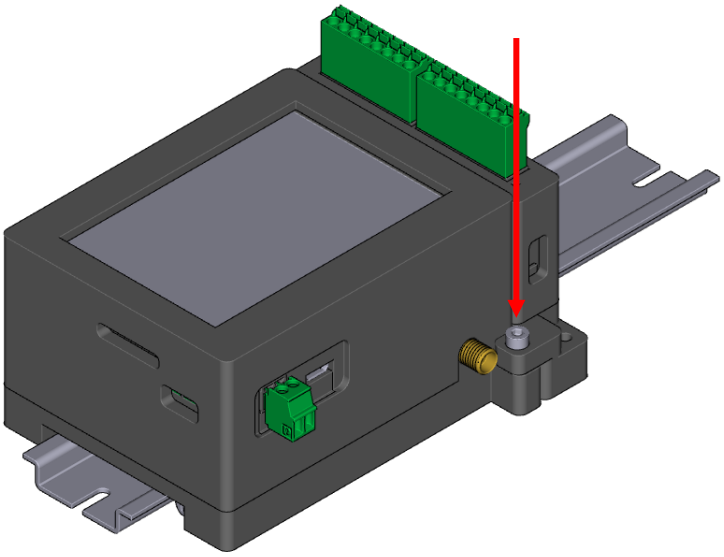

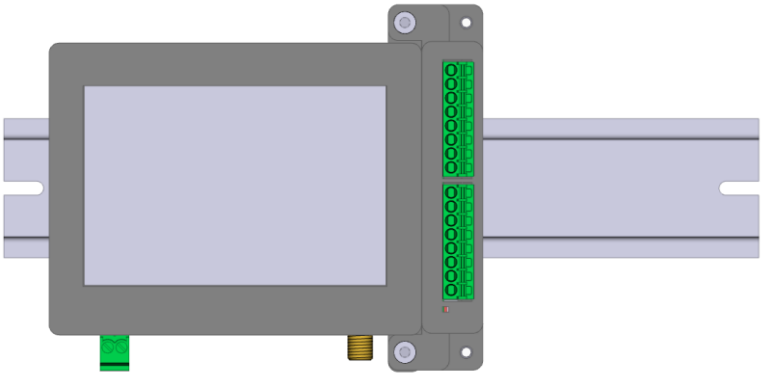

HOW TO UNMOUNT

1- Remove the fixing screws that hold the module together with the other modules

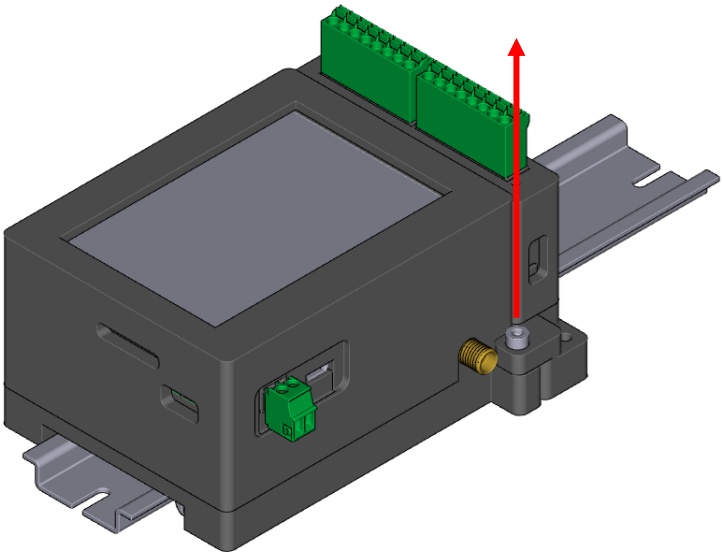

2- Slide the module to the right so that it is no longer connected to the Wixia-Controller or to another module.

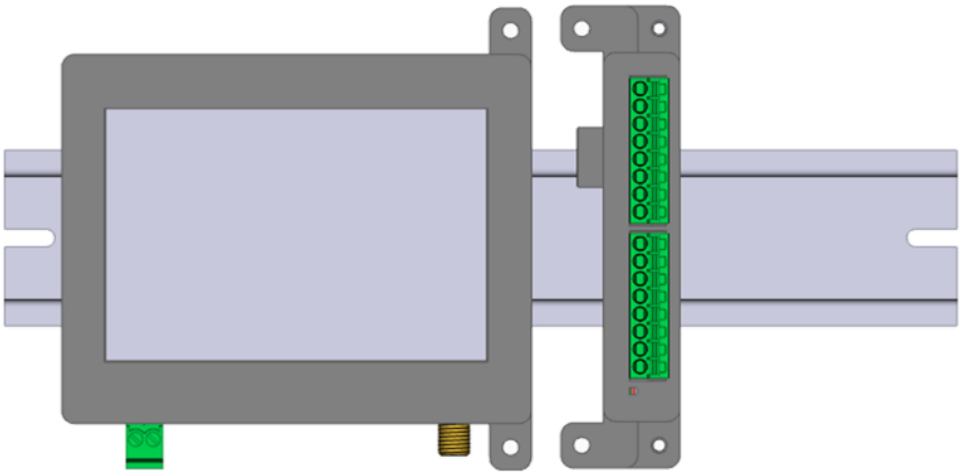

3- Slide the module to the right and push the module on the bottom while rotating the opposite angle to unmount it from the DIN-35 rail.

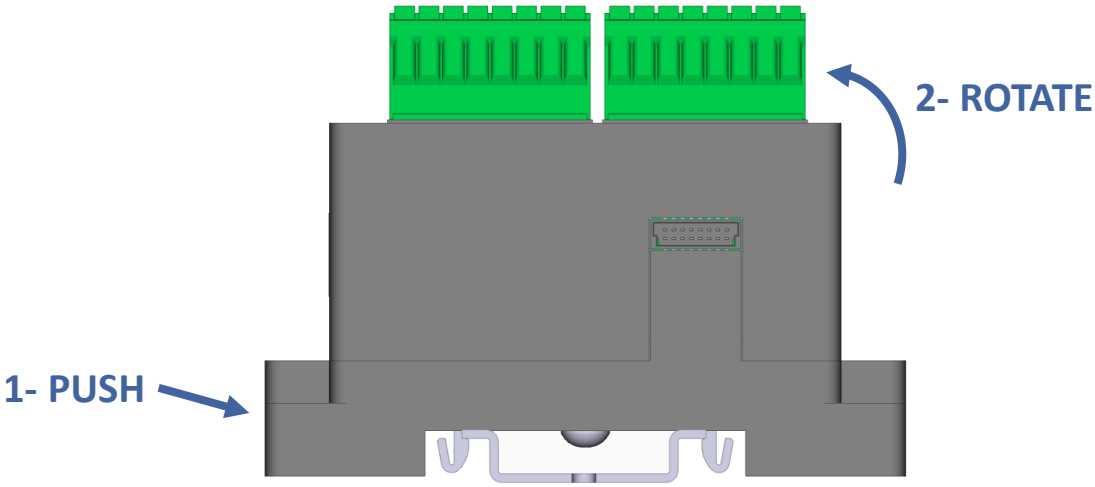

HAZARDS AND WARNINGS

Manufacturer is not responsible for user's failure to comply with the instructions contained in this manual.
Any service performed on this product must be completed by a qualified individual. Replacement of this product must be performed by a qualified individual.
Failure to use this equipment in accordance with the specifications in this documentation could lead to a hazard.
No parts in this device should be replaced or removed.
Disconnect all power supplies before servicing the equipment.

CONTACT

939 Rue de la Croix Verte,
Miniparc 12,
34 000 Montpellier
France

contact@applexia.fr
+33 (0)4 11 93 26 67