WIXIA

Wixia OUTPUT

4 digital outputs

2 power pins

DIN-35 rail mounting

Wixia OUTPUT module is dedicated to industrial sensors. This module must be connected to a Wixia-Controller to control actuators.
This module offers 4 digital outputs.
Actuators can be powered thanks to 2 Power outputs linked from Wixia-Controller power and 2 ground connections.

Powered by

APPLEXIA
SIMPLE IS BETTER

For more information
contact us or explore www.applexia.fr

PINOUT

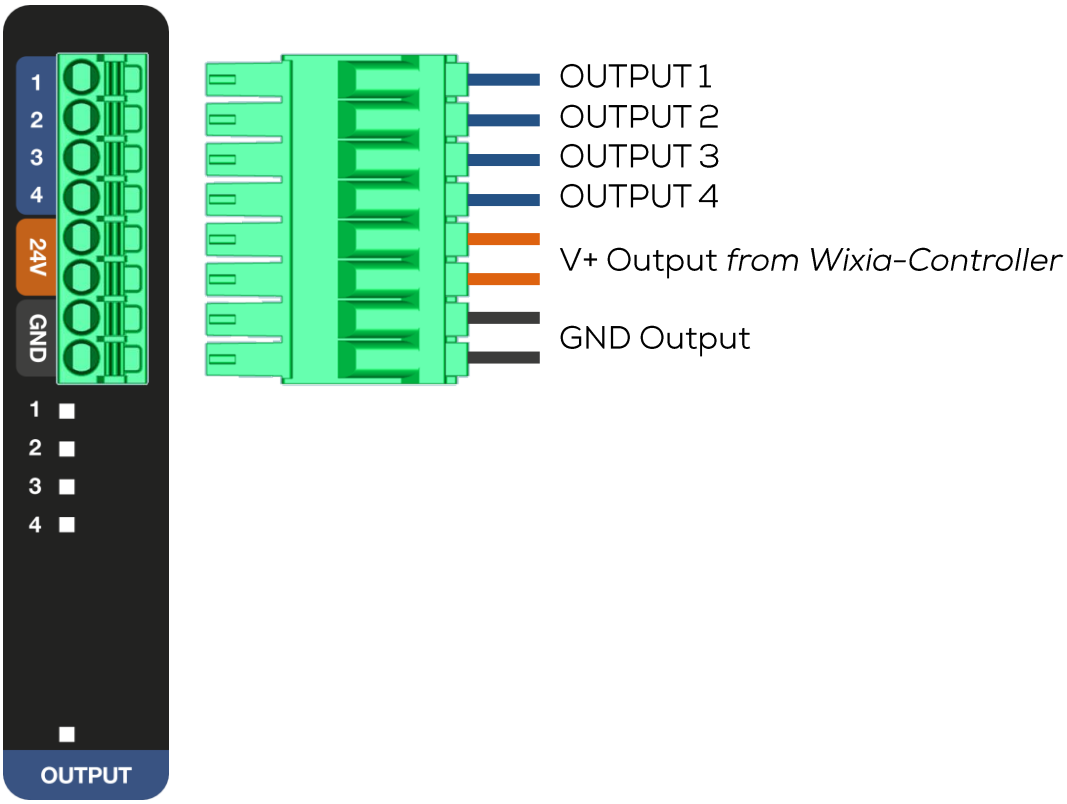

RELAY CONNECTION EXAMPLE

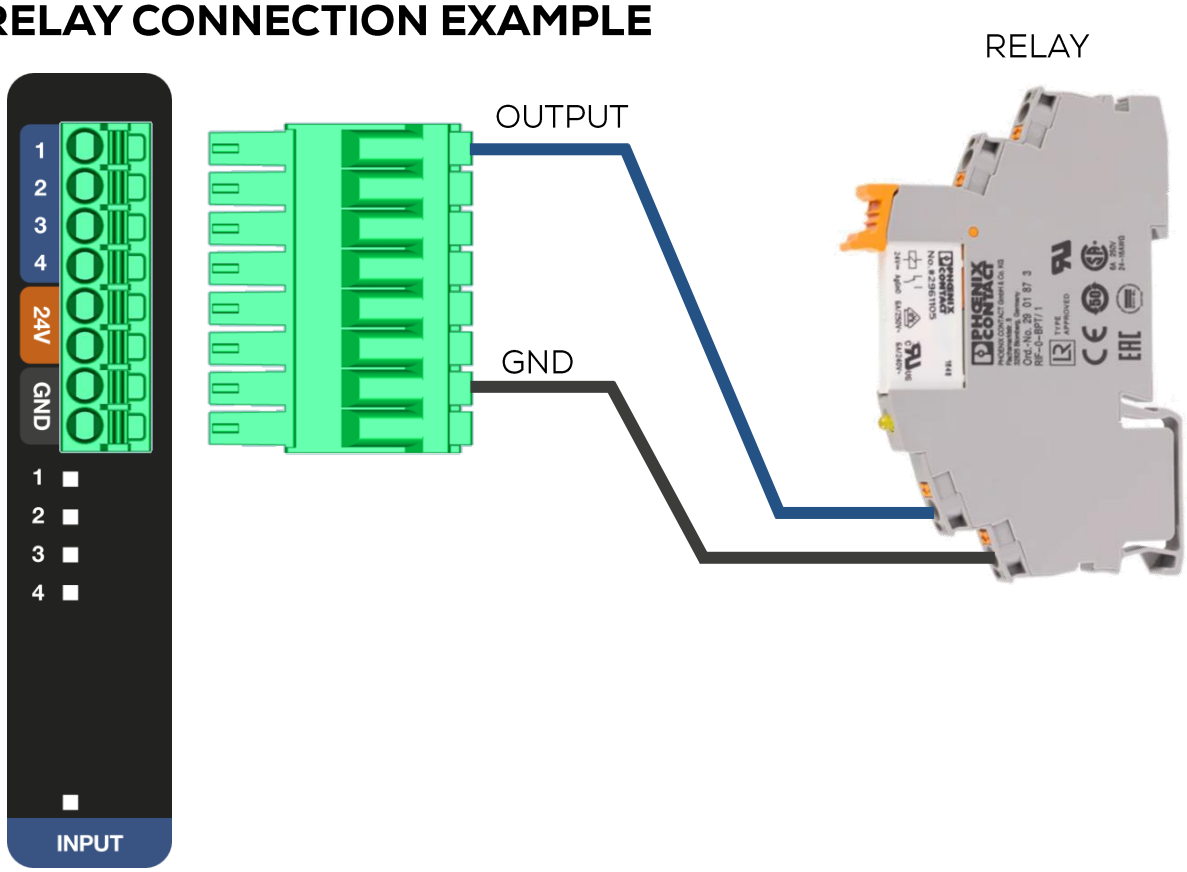

TECHNICAL DATA

GENERAL

Compatibility	To connect to a Wixia-Controller
Power	Provided by Wixia-Controller
Type of connection	Plug-in terminal with push-in connections

OUTPUTS

Number of outputs	4	
Nominal voltage	Wixia-Controller voltage *usually 24V*	
Nominal output current	Limited to main power supply current and max 0.5A	
Output On-resistance max per channel	3.25 Ω	
Turn-on delay t_{on}	V_{CC} = 24V R_L = 125 Ω C_L = 15pF	0.4 µs
Turn-on delay t_{off}		2 µs
Update rate	100ms	

OPERATING CONDITIONS

Temperature	-25 to 50°C
Humidity	10 to 80%, non-condensing

MECHANICAL CHARACTERISTICS

Dimensions (lxLxp)	2.4 x 5.1 x 9.1cm
Mounting type	DIN-35 rail
Weight	120g

HOW TO VISUALIZE / ACTIVATE / DEACTIVATE OUTPUTS

Access to the Output module using Wixia-Controller touchscreen.

Output module displays :
- status of each output as a red LED if output is OFF and a green LED if output is ON
- equivalent number with MSB as Output 4 and LSB as Output 1.

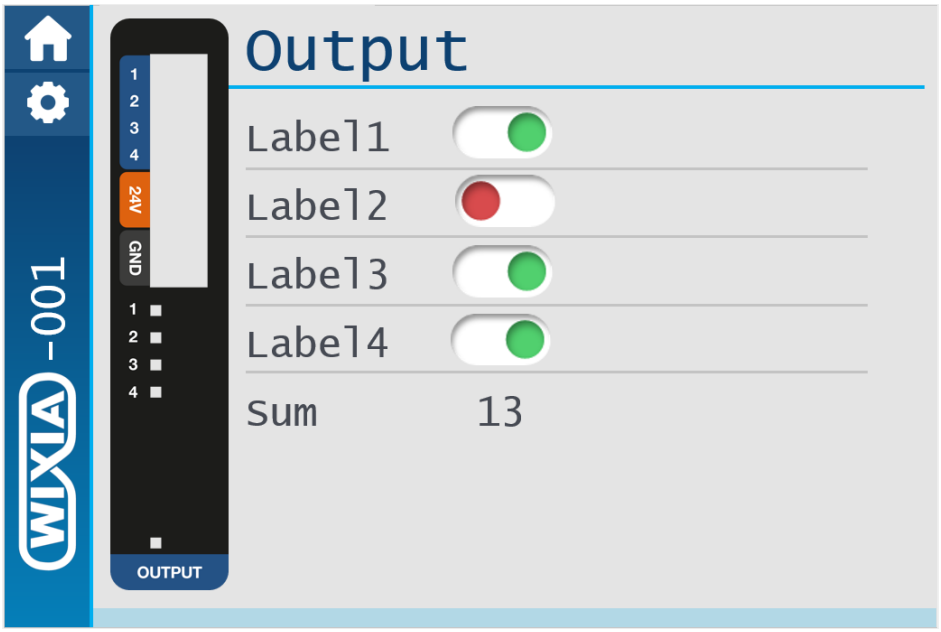

To activate / deactivate output value, simply click on the indicator.

HOW TO MOUNT

1- Simply clip the module onto the DIN-35 rail.

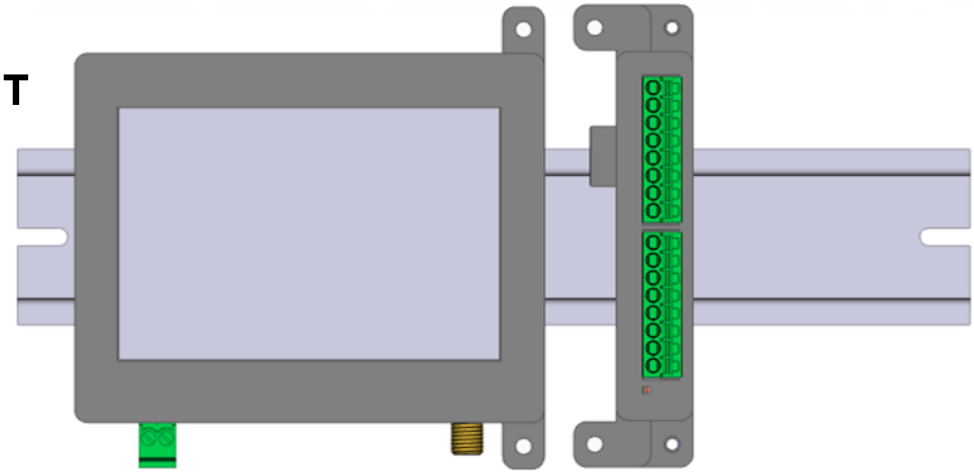

2- Slide the module to the left to connect it to the Wixia-Controller or to another module.

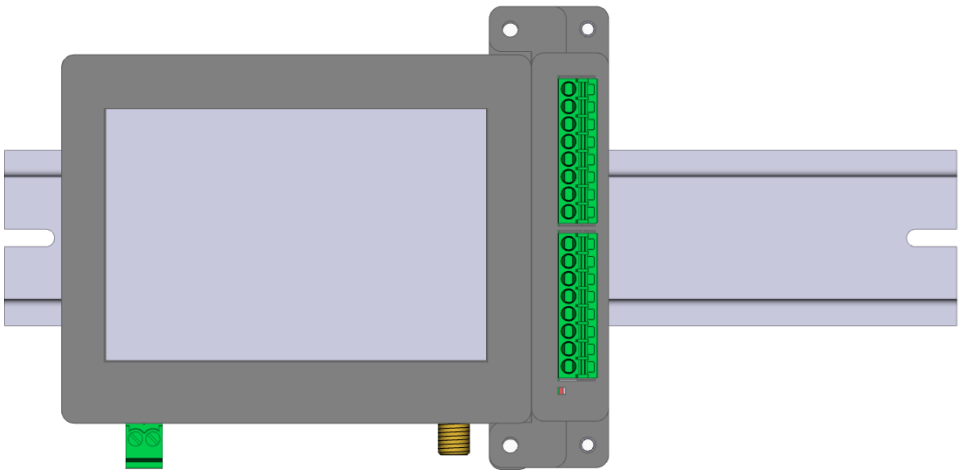

3- Fix the modules together using two M3x16 screws.

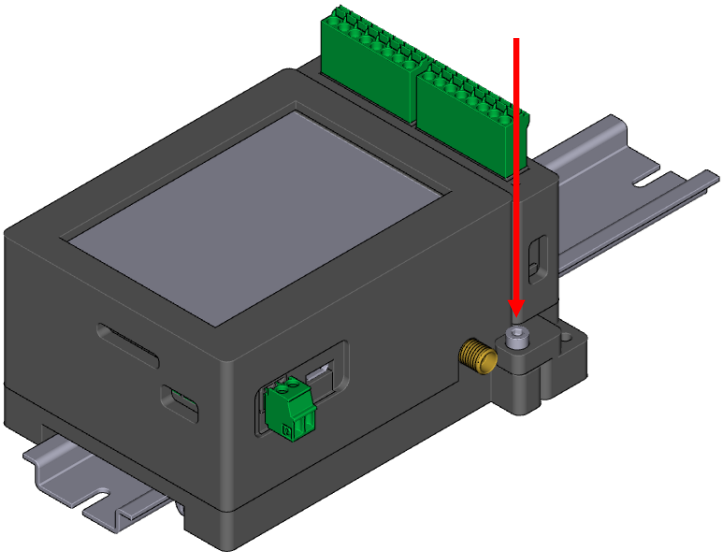

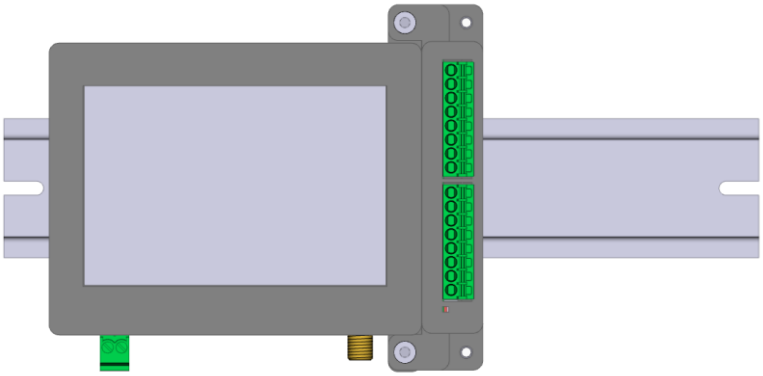

HOW TO UNMOUNT

1- Remove the fixing screws that hold the module together with the other modules

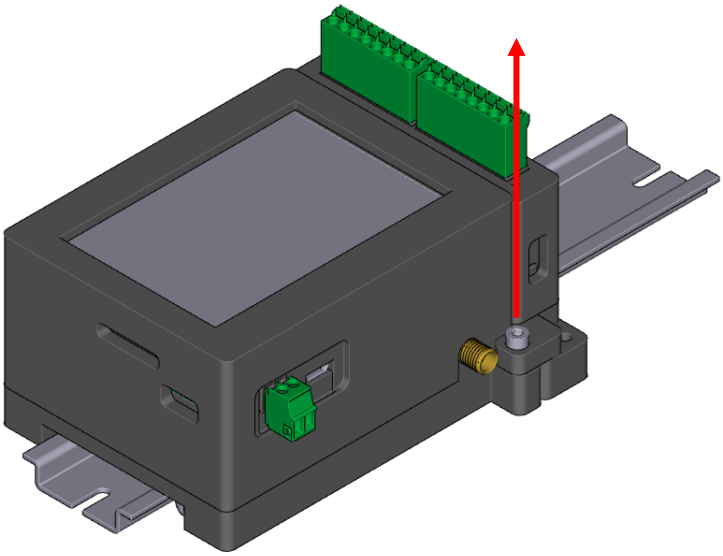

2- Slide the module to the right so that it is no longer connected to the Wixia-Controller or to another module.

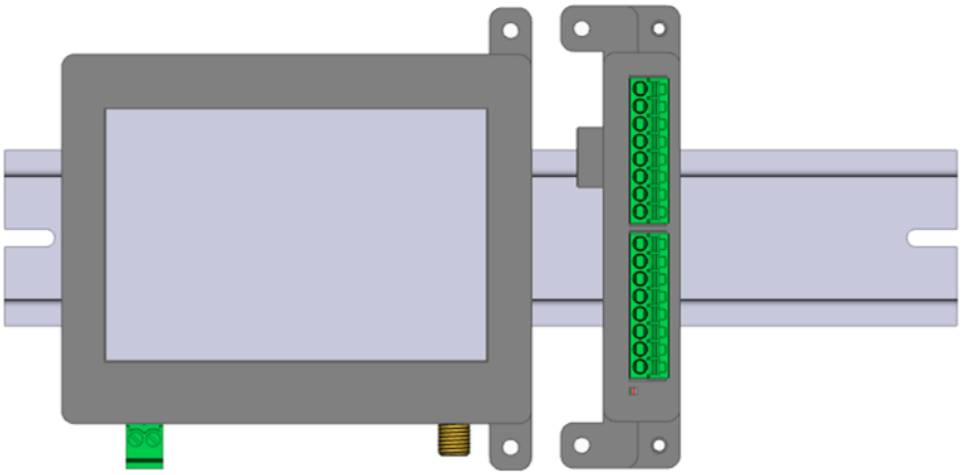

3- Slide the module to the right and push the module on the bottom while rotating the opposite angle to unmount it from the DIN-35 rail.

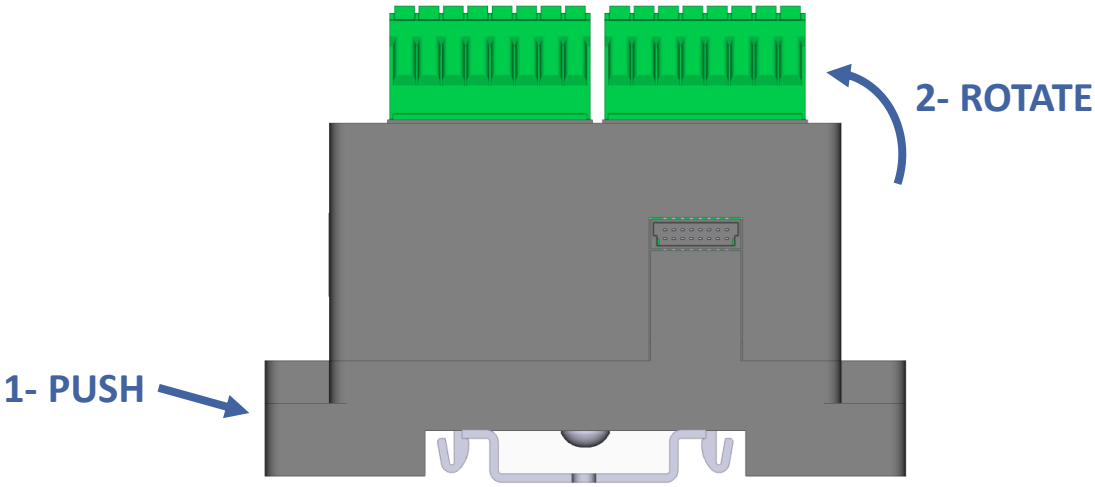

HAZARDS AND WARNINGS

Manufacturer is not responsible for user's failure to comply with the instructions contained in this manual.
Any service performed on this product must be completed by a qualified individual. Replacement of this product must be performed by a qualified individual.
Failure to use this equipment in accordance with the specifications in this documentation could lead to a hazard.
No parts in this device should be replaced or removed.
Disconnect all power supplies before servicing the equipment.

CONTACT

939 Rue de la Croix Verte,
Miniparc 12,
34 000 Montpellier
France

contact@applexia.fr
+33 (0)4 11 93 26 67